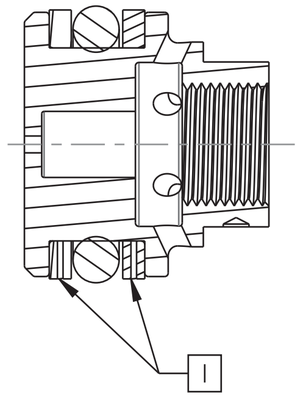

SECTION A-A

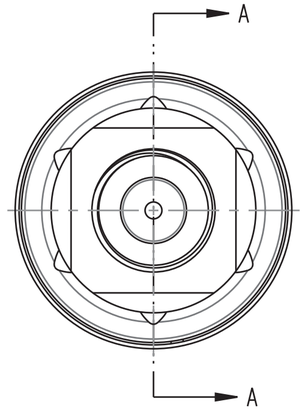

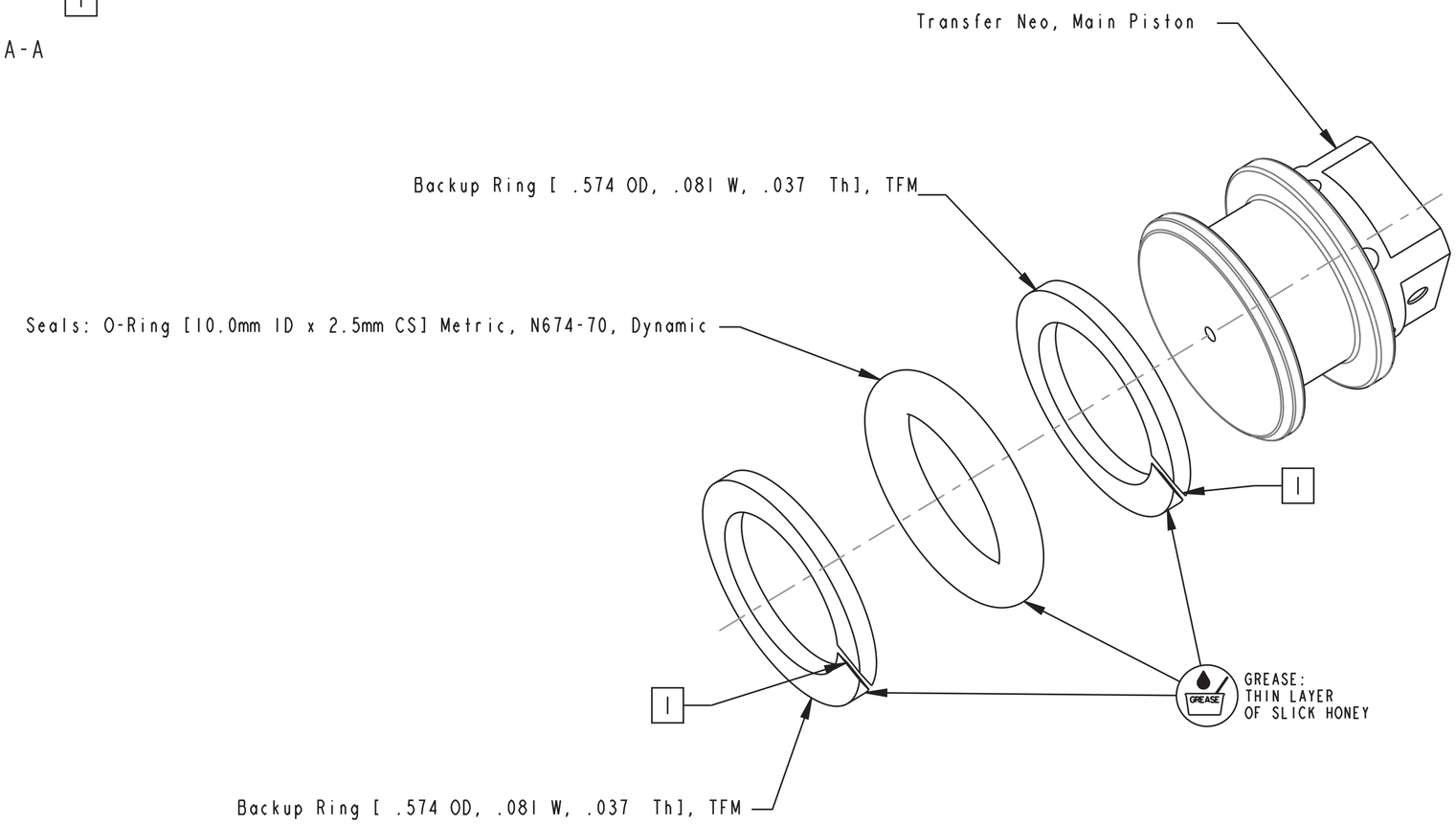

NOTES: (UNLESS OTHERWISE SPECIFIED)

1 CHECK THAT BACKUP RING SPLIT IS ALIGNED AND NOT MISPLACED

- PROPRIETARY-
THIS DOCUMENT CONTAINS CONFIDENTIAL, PROPRIETARY INFORMATION
THAT IS FOX PROPERTY. DO NOT DISCLOSE TO OR DUPLICATE
FOR OTHERS EXCEPT AS AUTHORIZED BY FOX.

FOX Factory, Inc.
130 Hangar Way, Watsonville, CA 95076 USA
Ph 831-768-1100
Fax 831-768-9312

TITLE

Transfer Neo, Main Piston Assy

SIZE	DWG. NO.	
C		
PLOT SCALE 4:1		SHEET 1 OF 1

ProE ASSEM